01 2008

CUSTOMER INFORMATION

WWW.VEM-GROUP.COM

Impulse

VEM SACHSENWERK • VEM MOTORS • VEM MOTORS THURM • KEULAHÜTTE

Dear VEM colleagues, dear readers,

The next two years will bring some enormous challenges for all of us. We will all need to further raise our performance, to improvise and to rethink our ways.

Our objective – to be able to react to the economic slowdown expected for 2010/2011 without reductions in the regular workforce at our main locations – is already casting its shadows. By the end of 2009, all the remaining feasible and necessary improvements at both our German and foreign locations must have been completed. Aims of these measures are to speed up order throughput and thus cut delivery times, to increase our own input to the products, to transfer cost-sensitive manual processes to our factories in Piestany and Most, and in this way to lower our unit manufacturing costs. Training schemes have already been initiated for our engineering staff and skilled factory workers, alongside the necessary construction projects at five different locations. With investments to the value of € 57 million for equipment and buildings, we are strengthening our competitiveness in all spheres of special electric machines and custom castings.

Our view of the responsibility born by companies and entrepreneurs

It is not our ambition to undercut or even match the price levels of the Chinese, Brazilian and other emerging mass producers. Our intention is to be – and remain – the fastest-reacting and most reliable supplier of value-for-money technology, guaranteeing our customers market proximity and competent individual advice.

Our continued growth in 2008 shows that this is the right product and marketing strategy. What we must now do, is to maximise the performance of our factories, through investment, optimised process organisation and elimination of all those tasks which are not directly concerned with the customer or product.

But together, we will again reach our ambitious goals, and will master the lean years from 2010 hand in hand. Foresight and prudent management are trademarks which have accompanied us through the past 11 years. I cannot promise you a totally carefree future, of course, but I will certainly be doing everything possible to ensure that your hard work translates into a positive outlook for us all in the coming years.

Yours,
R. von Rothkirch

VEM endows professorship

Wernigerode works to support research at the Harz University of Applied Sciences

A new aspect of teaching and research has been added to the future profile of the Harz University of Applied Sciences in Wernigerode. With the support of VEM motors, an endowed professorship has been installed to focus on electric machine design. VEM motors has agreed to cover the personnel costs for an initial period of five years, and is at the same time establishing the prerequisites for a research laboratory on the company site. Students will there be able to test their newly gained knowledge and develop practical skills. The alignment of the new teaching and research activities is to provide a response to the increasing demands placed on modern drive technologies. Further attention is also to be paid to customised electric machine designs for the most diverse special applications.

Proving knowledge in practice and gaining skills

"Everyone is talking about deficits when it comes to the recruitment of appropriately qualified new staff, but only a few are prepared to venture along innovative paths and seek concrete solutions," says VEM managing director Jürgen Sander in explaining this step. "We have laid down a contractual basis with the university, and now we must work together to fill the idea with life." This is one of the results of sustained prosperous development of the company and will further intensify the existing cooperation with the Harz University of Applied Sciences.

The contract establishing the endowed professorship was signed by Jürgen Sander, as managing director of VEM motors, and university rector Prof. Armin Willingmann. "This is an important signal and a sign of confidence in the capabilities of the university. We are already preparing the corresponding appointment procedure for the new post, which will be affiliated to the Department of Automation and Informatics," said a delighted Prof. Willingmann after signing the contract. The professorship is to concentrate especially on the dimensioning and technologies of electric motors. This will also include computer-assisted design for the mechanical components, the magnetic circuit and the winding geometry.

"With this involvement, VEM has given a significant boost to the reputation of the region as a research and development location," Prof. Willingmann added. Furthermore, it enables qualified staff to remain in the area and thus to contribute to local economic development.

Photo: Karin Wagner

Test bays at VEM motors enable students to develop practical skills.

VEM at the Hanover Fair 2008

Live for the future

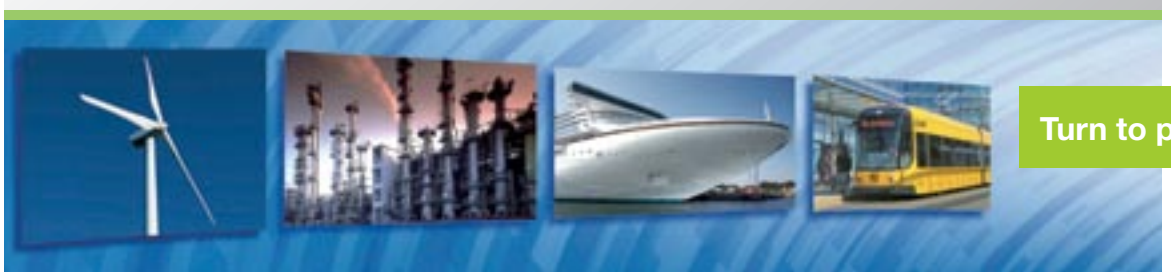

Turn to page 2

Wind turbines for the Chinese market

Page 3

Centenary celebrations at VEM motors Thurm

Page 4 – 5

Unusual technology for an unusual ship

Page 7

VEM AT THE HANOVER FAIR 2008

Our welcome to the fair stand in Hall 11.

Live for the future

VEM Group looks forward to presenting energy-efficient drive solutions

The drive technologies of tomorrow will be faster, more flexible and more efficient than ever before. At the same time, they must incorporate new solutions for energy generation and savings, to help cut energy costs and meet the demands of climate policy. VEM is attending the Hanover Fair 2008 with energy-efficient and innovative drive solutions geared precisely to these trends. The products of the VEM Group are this year congregated under the banner "Live for the future". Through energy savings and by exploiting renewable energy sources, they contribute their share to a reduction of CO2 emissions.

VEM is taking the world's largest industrial exhibition as the platform to present a new development for wind power generation. The 2.5 MW permanent-field machines are to enter series production at the end of 2008. In the low-voltage sector, we are concentrating on the topic of energy efficiency. And a further focus will be placed on explosion-protected three-phase motors.

Alongside its central product presentations, the VEM Group will be conveying interesting information at a number of fringe events. On 22nd April, for example, VEM is organising a service conference in the Convention Centre between 11 a.m. and 1 p.m. The VEM Group will also be participating at the special event "Energy efficiency in industrial processes", which has been arranged in Hall 6 by the exhibition organisers in conjunction with the ZVEI. VEM will be demonstrating the solutions offered by the company to support industry in its efforts to promote energy efficiency. On 23rd and 24th April, panel discussions on current developments in electrical engineering will be taking place at 11 a.m. each day. The topic for the Wednesday meeting is: "Energy-saving motors – Where do we stand today?". This is to be followed on Thursday by a discussion spotlighting "Drive systems today and in the future – New product developments from the VEM Group".

You will find us in Hall 11, Stand B 08.

Efficiency-optimised compact drives

Hanover Fair 2008 – Innovations for low-voltage applications

VEM has developed a variety of solutions addressing the question of energy efficiency in low-voltage applications. Low-voltage motors of the highest energy efficiency class (EFF1) have been integral to our product range for many years. At this year's fair, however, we intend to show users how variable-speed drives actually permit far greater savings than motors of the EFF1 class. To this end, VEM motors will be presenting the proven compact drive technology of the existing M21...T EW series.

The particular benefit of an efficiency-optimised compact drive: It is a simple matter to replace existing motors within the framework of modernisation measures, and that without modifications to the installation. The overall efficiency of the drives has been raised by 3 to 10%. Especially positive effects are achieved in the low output range. A higher efficiency is achieved not only at the rated frequency of 50 Hz and in full-load operation, but also with partial loads and at lower frequencies. The higher investment outlay is very quickly offset by the lower operating costs. Not only traditional applications, for example pump drives, fan drives and air-conditioning, are set to profit from this drive solution, but also new branches such as conveyors and vacuum technologies. The drives are generally available for outputs up to 7.5 kW, but higher outputs can be supplied to special request.

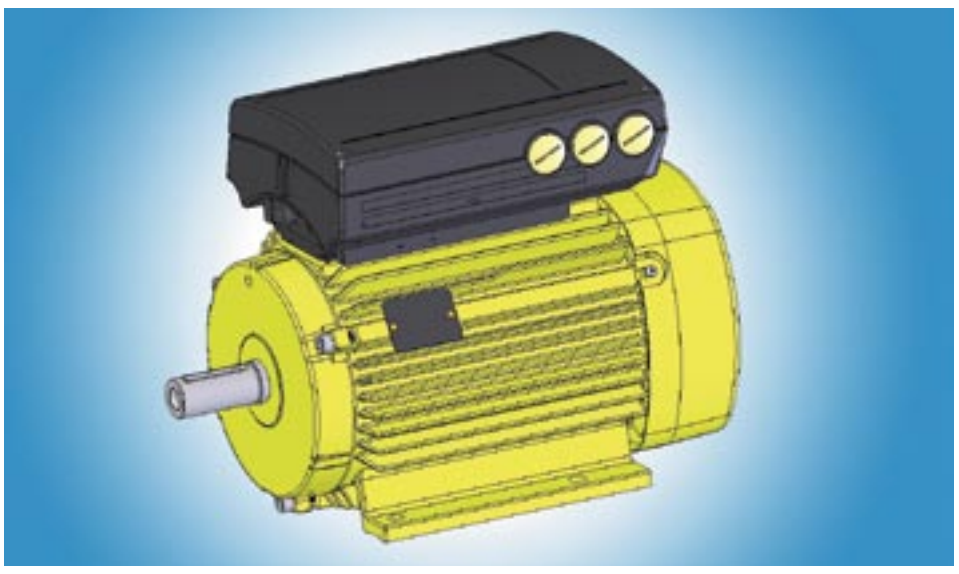

Compact drive M21...T EW (400 V, 50 Hz) with designation as an EFF1 basic motor to CEMEP

| FAIR NEWS 2008 |

This year, too, the VEM Group will be demonstrating its innovative capabilities at numerous international fairs and exhibitions. The highlight on the calendar is the Hanover Fair from 21st to 25th April.
We also look forward to meeting you at the following fairs:

Elcom Ukraine in Kiev, Ukraine

12th International Trade Show for Power Engineering, Electrical Engineering and Energy Efficiency
15th to 18th April 2008

SPCI 2008 in Stockholm, Sweden

World Pulp and Paper Week
27th to 29th May 2008

SMM in Hamburg, Germany

International trade fair for shipbuilding and marine technology
23rd to 26th September 2008

InnoTrans in Berlin, Germany

International Trade Fair for Transport Technology – Innovative Components, Vehicles, Systems
23rd to 26th September 2008

Permanent-field synchronous motors with frequency converter

Hanover Fair 2008 – High-efficiency drives

The modern drive solutions which VEM motors will be showing at the fair include also permanent-field synchronous motors. In combination with frequency converters, they are characterised by their higher level of efficiency compared to asynchronous motors. The current output range includes motors up to 7.5 kW or 45 Nm.

With this solution, VEM has responded to the trend of using variable-speed drives to raise energy efficiency, wherein maintenance-intensive DC machines are replaced by simple three-phase designs. The greatest demand for such robust, favourably priced solutions is expected in the output range from 750 W to 7.5 kW.

Through modification of the rotors, VEM motors Thurm is here able to offer certain of its standard-series asynchronous machines as permanent-field synchronous variants. A machine of the same frame size returns a higher output in this configuration. Alternatively, the same load could be handled by a smaller machine. With the rotor following the rotating field, it becomes possible to use several synchronous drives for conveyor belts. Another important field of application is small-scale power generation. Especially in regenerative applications, permanent-field synchronous machines are suitable both for simple off-grid solutions and for grid-connected variants with corresponding inverters.

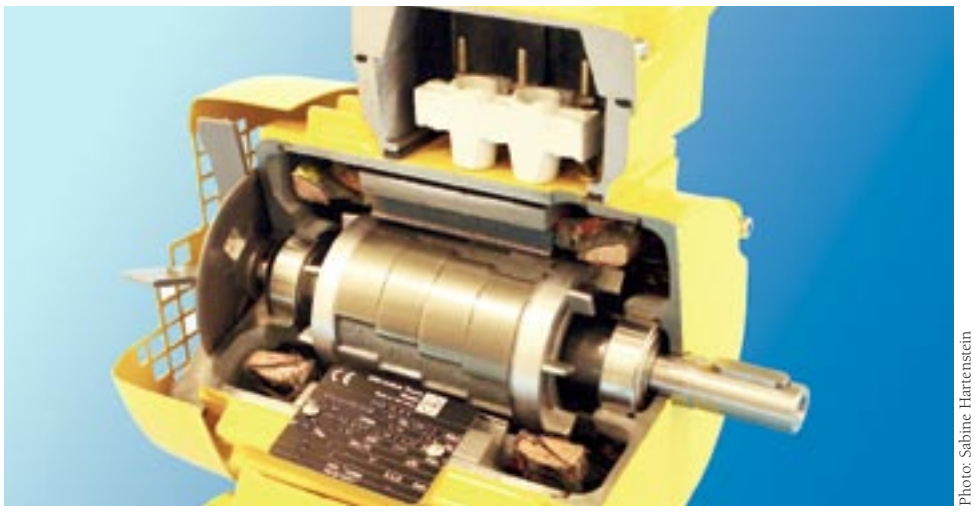

Photo: Sabine Hartenstein

This section model of a P21R 71 G4 shows the rotor without banding and can be seen at the Hanover Fair 2008.

Wind turbines for the Chinese market

Licence agreement governs manufacturing of Sachsenwerk generators in Nanjing

From the coming autumn, electric generators developed at Sachsenwerk for wind turbines are to be manufactured by the Chinese company NTC. The details have already been laid down in a contract signed by NTC president Qun Shen and Sachsenwerk managing director Gerhard Freymuth in Nanjing in October 2007. The licence agreement refers to the extremely successful DASAA 500 series from Sachsenwerk – dual-infeed asynchronous generators with nominal outputs between 1,300 kW and 2 MW.

"Local" product for the key Asian regions

With this agreement, Sachsenwerk has been able to further strengthen its leading position in the field of wind turbine generators. After all, VEM is now able to offer its globally active customers a "local" product in identical quality directly from one of the key regions in Asia. At the same time, the additional capacities will make it possible to satisfy the increasing demand from the rapidly expanding Chinese market itself. The company NTC, with a workforce of around 2,000 employees, can point not only to some 50 years of experience in electrical engineering in comparable output classes, but also to fruitful cooperation with renowned international partners.

An intensive programme of training in Dresden and Nanjing over the next few weeks is to lay the foundations for the planned production start in autumn 2008. VEM and NTC assume that an annual production of at least 500 generators can be realised from 2009. Know-how transfer for higher-output generators is already envisaged for a later date.

NTC president Qun Shen and Gerhard Freymuth, managing director of VEM Sachsenwerk, at the signing

For new generations of skilled specialists

VEM Group devotes own resources to training and qualification

It is for any industrial company a matter of economic survival to gain and retain the services of appropriately trained and committed employees, engineers and managers. The VEM Group has decided to address this task with its own resources, and has initiated a number of interesting projects aimed at attracting new generations of specialists.

For some time now, we have been intensifying our cooperation with colleges and universities, offering more work placements and research opportunities for students than ever before. Special agreements on performance targets boost the motivation of the young people and prepare them for future tasks within the VEM group. We have already reported elsewhere in this customer magazine on the latest example, an endowed professorship in electrical engineering, established jointly by VEM motors Wernigerode and the Harz University of Applied Sciences.

In-house vocational training is also not being neglected, with some 90 trainees and vocational academy students currently learning at the various companies of the VEM group. To help ensure a stable pool of skilled employees for the future, we work together closely with local schools. Specific promotion agreements are geared to kindling an interest in electrical engineering careers at the earliest possible stage. In Dresden, for example, work experience programmes are organised by the Sachsenwerk vocational training facilities. This gives school pupils an opportunity to come into contact with an industrial environment and to find out what can be expected in and from such a job. Similar agreements have also been concluded between Keulahütte and schools in Krauschwitz and Weisswasser.

Positive experience has been gained with our participation at vocational training and education fairs such as the "Karriere-Start" in Dresden. They have proved an ideal hunting ground for new employees. At the same time, the present staff also benefit from a wide spectrum of targeted qualification programmes. Works agreements have already been signed in Dresden and Wernigerode, guaranteeing the employees generous support during the period of further training.

Such examples demonstrate just how seriously the VEM Group takes careful promotion of both future specialists and its existing workforce. After all, well trained and committed employees are imperative if we are to succeed in further strengthening our market positions, and in offering our customer the services which will convince him to buy quality products made in Germany.

Photo: Knut Stutzkowski

Trainee Matthias Schneider is learning the trade of a metalworking fitter at VEM motors in Wernigerode. All VEM companies attach great importance to a high standard of in-house vocational training.

Photo: Karin Wagner

Vocational training and education fairs – like the "Karriere-Start" in Dresden (Photo right) – are for VEM a welcome opportunity to attract new generations of specialist staff.

| ENVIRONMENTAL SOLUTIONS |

Measure up Keulahütte at IFAT 2008

One particular highlight for Keulahütte this year is the 15th International Fair for Water, Sewage, Refuse and Recycling (IFAT), which is to be held at the New Munich Exhibition Centre from 5th to 9th May 2008. The Krauschwitz specialist will be presenting a whole host of interesting innovations in Hall A6, Stand 309/408. A fantastic facelift for the range of overground hydrants is being prepared, and the spectrum of fittings has been similarly extended and completed. This is expected to lend additional impetus above all to export business.

In addition to these range extensions, there will be many interesting developments addressing the topic of coatings. After all, the customers must react to new conditions at the latest in October 2009, when the European Approval System (EAS) comes into effect. Bitumen will then no longer be accepted as a coating material and will be forbidden in drinking-water applications. But thanks to its experience with integral epoxy-powder coating, Keulahütte has already been a competent partner in all questions concerning coatings for well over a decade.

100 Years Thurm – Drive

20th March 2008 is an important date for the chronicles of VEM motors Thurm. It was exactly 100 years ago that the company was founded in the small community before the gates of Zwickau. Various social and political upheavals were mastered over the past century. What began with a small craftsmen's workshop, and later served as the nucleus for a major socialist combine with nine branch works in Plauen, Gera, Schönheide, Werdau, Bockau, Schneeberg, Stavenhagen, Herlasgrün and Grimma, is today an internationally successful industrial enterprise. Its longstanding traditions represent an invaluable wealth of experience in the designing and building of electric machines. This benefits also the other member companies of the globally active VEM Group. 100 years of VEM motors Thurm stands for continuous further developments in electric motors for the most varied sectors of industry, for example plant engineering, conveyors, energy and environment technologies, heating and ventilation, or transportation. Today, three-phase asynchronous motors are manufactured predominantly in customised versions for users on all continents of the world.
On these pages, we would like to present some of the milestones from the tradition-rich history of VEM motors Thurm.

2

1 The mill by the station of the Mosel-Ortmannsdorf narrow-gauge railway near Zwickau was owned by brothers Kurt and Alfred Stephan for a brief period at the beginning of the 20th century. With the aid of a steam engine, they supplied drive power also to a neighbouring sawmill. The Stephan workshops developed from an electrical business set up in 1908. Electrical installation work was ceased during the time of the Weimar Republic. The company founders decided to concentrate instead on motor and gearbox manufacturing.

1

2 The brothers Alfred (left) and Kurt Stephan founded their new company as equal partners, with an initial capital of 100 marks. Small electric drives for craft and industrial applications were in great demand. In 1920, a considerable number of machines were in use in the weaving mills of Thuringia and Saxony. The manufacturing facilities were expanded continually. Up to the end of the Second World War, two factories were producing electric motors for all current types and for every conceivable application.

100 JAHRE
VEM motors Thur

Repair work was resumed in 1946, and it was not long before the first motors were being manufactured once more. In 1986, the nationally owned enterprise VEB Elektromotorenwerke Thurm counted some 3,700 employees and produced 1.2 million electric motors each year at its nine manufacturing locations. Of this figure, 56 per cent was exported to the West. The company shaped the export profile of this whole branch of industry. Newly and further developed standard motors had in the meantime reached their fourth generation since manufacturing was recommenced, accompanied by three generations of geared motors.

3

5 The Thurm factories also manufactured consumer goods once more. The washing machine "Thurmperle", with reversing gears and an oakwood drum, and a combined grinding tool was produced from 1954.

6 Refounded as VEB Elektromotorenwerke Thurm in 1947, the company attended every subsequent Leipzig Spring Fair. Motors were exported to 45 countries around the world.

6

3 The first fan drive motor designed by Alfred Stephan fulfilled all expectations. New motor types were developed for special applications and the production figures increased constantly. In 1928, the company sold its 50,000th motor. A year later, a first geared motor was developed. In 1935, the 100,000th motor was delivered. Both factories were confiscated by the authorities at the end of the war. .

8

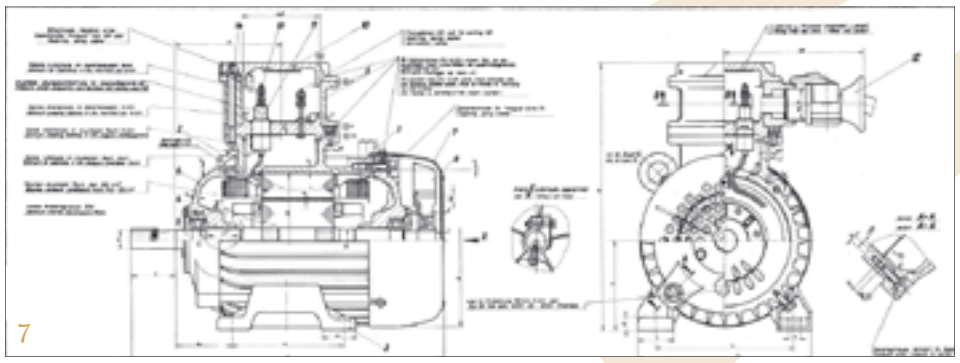

7

7 The drawing depicts a three-phase motor in an explosion-proof design to the Indian standard. When the standard motor series KMR was introduced in 1971, India was granted licence rights to manufacture the old KR series. The corresponding tools and machines were also sold.

8 Alongside three-phase and geared motors, the factories also manufactured built-in motors and special drives for weaving looms, electric tools, woodworking machines, forge bellows, sirens and fans.

9 The company was the sole manufacturer of geared motors in the socialist economic zone. A new type series was developed with ratings and dimensions compliant with both the guidelines of the Council for Mutual Economic Assistance and the IEC standards. Five sizes of gearbox, each in combination with two motor sizes, covered an output range from 0.12 to 7.5 kW and speeds from 16 to 400 rpm.
The motors were smaller and lighter than the previous type series, and furthermore particularly quiet-running.
A new geared motor factory was established in Schneeberg in 1967, and the 230,000th geared motor was already manufactured in 1973.

s By Tradition

10 10 The 1990 currency reform and German unification heralded difficult times for the company. The socialist export markets collapsed and turnover dropped dramatically. The branch factories were closed or sold. From 1992, all manufacturing capacities were concentrated in Zwickau-Pöhlau. The site there had been taken over from the former coal mining enterprises in 1968. Situated on the B173 trunk road on the outskirts of Zwickau, it was considered to be the better location (see aerial photo). The new company name VEM motors Thurm serves to remember the place at which the original business was founded.

10

12

12 In the special assembly hall, with its adjoining test section, special drives are assembled in literally thousands of different customised configurations, and then subjected to a comprehensive programme of stringent testing. Applying their 100 years of experience in the field of electric motors, the present workforce of 306 employees and 14 apprentices has production floor space totalling 12,480 m² at its disposal and manufactures a whole range of high-quality, individual and reliable products.

Following extensive restructuring at the site, which was accomplished without interrupting production, the company concentrated its attention on the motors sector. In 1997, the company was privatised by entrepreneur Dr. Adolf Merckle and his family. Annual turnover has been increasing ever since, and after 10 years has reached 49 million.

13

13 Intelligent drive solutions with ultimate energy efficiency and flexibility for mixing applications are based on variable-speed three-phase drives. Precise speed control for the agitators is imperative to ensure reproducibility of the defined product parameters.

15

14

14/15 VEM motors are in use in hundreds of high-speed trains and diesel-hydraulic locomotives, for example as bypass or condenser fans in air-conditioning systems, or in hydraulic pumps. In the transport branch, the technical demands are especially high, particularly in respect of safety, reliability, precision and durability. That applies equally for the drives of the Fichtelberg cable cars.

16

16 Three-phase asynchronous brake motors are manufactured in large numbers for use as yaw drives in wind turbines. Four drives are required to turn the nacelle to its optimum position and then to hold it there. Perfectly matched to each other, they are able to track even the slightest change in the wind direction.
Some of these wind turbines have even been designed for offshore installation. Wind farms throughout Europe, the USA, Asia and Canada are to be found among the orders for brake motors.

9

17

17 The company can look back over long traditions in the field of motors and drives for marine use, for example for fans, pumps, capstans and hoists. The cruise liner Fritz Heckert was launched in 1960. Today, VEM is supplying all the low-voltage motors for the latest additions to the AIDA fleet. The first "club ship", the AIDAdiva, was handed over in 2007 (photo above). Orders for three further luxury liners are currently still being worked on. VEM motors Thurm supplies furthermore special motor versions, predominantly with EEx e and EEx n ratings, for offshore installations.

18 The modern VEM product range includes drive motors for pumps, fans and auxiliary drives in power stations, waste incineration plants, pump stations, waterworks and water treatment plants (photo below). VEM is a full-line supplier of rotating field machines for the branches plant engineering, chemicals, oil and gas, power generation, environment technology, wind power, transportation, steel and rolling mills, and shipbuilding.

18

| INTERNATIONAL |

Changes at VEM motors Sweden

A change of management and a new location constitute a promising basis for the future at VEM motors Sweden AB. Mr. Kermith Svensson took up the management reins in July 2007. With a proven range of efficient products, paired with a committed and motivated team, the company is a competent partner on the Swedish market. "We have here seen strong growth in the orders for energy-saving motors of the EFF1 series," says the new managing director. More and more products are being requested within the framework of projects, which places high demands on the performance qualities of the VEM products.

Similarly last year, the company moved its offices to Malmö. The new location offers better conditions, as a basis for satisfaction of the higher demands, and is at the same time a reflection of the successes achieved during the first ten years since founding of the company.

VEM motors extends its particular thanks to departing managing director Berne Jönsson for his decisive contributions to this positive development. As a result of his excellent ground-breaking work, he was able to hand over a particularly strong sales organisation within the VEM group.

Kermith Svensson (front centre) with the team of VEM motors Sweden

New test stand for large machines

Sachsenwerk now able to test outputs up to 5 MW

Sachsenwerk has secured an important prerequisite for the long-term, future-oriented further development of high-output electric machines. In December 2007, the go-ahead was given for construction of a new converter-fed large-machine test stand. The VEM assets office is planning to have the test hall ready for use by the end of 2008. The electrical equipment is to be installed by Siemens.

Doubled test stand capacity for electric machines

This project will enable Sachsenwerk to double its electrical testing capability to 5.0 MW. The majority of mid-range electric machines can then be tested directly. This will eliminate the need for many time-consuming substitute test methods and the test stand throughput will be increased. In future, test procedures can be controlled automatically. The configuration of the test and measuring circuits will be semi-automated. Significant benefits result for the customer. A modern visualisation function permits customers to follow the course of testing and presents relevant results without further delay. This is made possible by the clear depiction of the components in the test circuit, the optical transmission of the measured values to the new control centre, online presentation of the measured values and diagrams, and online evaluation of the measurement series, e.g. to determine no-load losses. The test stand was designed with an eye to redundant configuration of the primary components. Two parallel branches each provide for half of the overall test output, and in this way guarantee the high level of availability of the test stand.

Photo: Karin Wagner

View of the present test stand for large machines. The new hall to accommodate the test stand in the future is expected to be ready for use at the end of 2008.

| PEOPLE |

New responsibilities for Jens Muschel

With effect from the beginning of 2008, Jens Muschel has taken on new responsibilities as head of the order processing centre (ABZ) at Sachsenwerk. His duties include integration of the orders received into the on-going production processes, and tracking of the current orders through to shipping of the machines. Capacity planning and smooth introduction of the SAP accounting system in production are further aspects. As long-standing manager in contracting sales, Jens Muschel has already gathered all the necessary experience to master these new challenges.

Photo: Karin Wagner

Jens Muschel heads the order processing centre.

Modern high-performance fettling system

Keulahütte expands the machinery base in its cleaning department

The program-controlled grinding centres at Keulahütte have provided ample proof of their productivity and reliability over the past months with piece weights up to 27 kg. The logical next step was to expand the grinding centres with a larger high-performance fettling system of the Barinder/Koyama 500 series. The enormous cost pressures resulting from the explosion in raw material and energy prices also served to accelerate the investment decision.

The purchasing of a larger grinding centre means that most of the series-produced castings can now be cleaned automatically. The only condition is that corresponding programs and fixtures must be produced for the robot. Two to three new product ranges are being transferred to the machine each week. This not only raises the hourly fettling performance, it also reduces the proportion of heavy manual work in the cleaning shop. The parts to be treated are finished completely on the grinding centres, including also check tests with gauges and minor reworking tasks within the times of the automatic cycles.

The new system can handle castings with diagonals up to 1200 mm and weights up to 120 kg. It possesses a twin table allowing simultaneous grinding and loading/unloading. A diamond-coated stainless steel disk with a diameter of 355 mm removes all mould and core print burrs with no further ado. With the part still in the same clamping, an auxiliary spindle provides for effective cleaning of any difficult-to-reach areas.

Once full utilisation is reached, it is planned to integrate further grinding centres to achieve even greater cost savings.

This high-performance fettling system now complements the original grinding machines.

Unusual technology for an unusual ship

Sachsenwerk develops and supplies an electrical system and drive concept for Canadian ferries

The first of three vessels of the new Super C-class for BC Ferries arrived at its future home port on Vancouver Island on 31st December. Built in Flensburg, Germany, it had thus completed a maiden voyage across the Atlantic Ocean, through the Panama Canal and up the west coast of Central and North America. The unusual thing about this voyage: The ship is not an ocean-going liner, but a ferry designed for coastal waters.

Sachsenwerk has made decisive contributions to the electrical system and drive concept of the new ferries. Four generators and two propulsion motors for each of the three vessels are to be supplied by the VEM works in Dresden. The outputs of the propulsion motors, 11 MW each, are typical values. The high capacity factor and the operation without converter for a guaranteed stable system, on the other hand, are something rather special.

The 3,500 starts per year are handled by so-called soft starters. Particular to such starters is that the motor is subjected to considerable harmonics from the phase control. Consequently, there is also additional thermal stress on the short-circuit bars. To be able to determine the loads for the squirrel-cage winding, the calculation department at Sachsenwerk worked together closely and intensively with the University of Hanover and the marine electrical and electronics supplier SAM Hamburg. The result was a new, high-strength short-circuit bar alloy. For the first time, measuring sensors were also incorporated into the rotors to permit permanent monitoring of the temperature.

Economical and robust system with only negligible effects for the on-board system

The starting parameters of the soft starter were optimised under the auspices of SAM Hamburg. The chosen sequence provides for the motor to be supplied only the voltage level required to deliver the necessary starting torque. Once the increased breakaway torque is reached, the r.m.s. value of the infeed voltage is immediately reduced and the motor is fed only a fraction of the current. This measure proved very successful during trials with the first vessel. Measurement series indicate that the rotor winding loads are not unacceptably high even with frequent starting, and show that reliable operation can be ensured also under extreme conditions.

The operating configuration comprises soft starter, squirrel-cage motor and adjustable propellers with a load reduction to 20%. This makes for an economical, very robust system with only negligible effects for the on-board electrical system. Compared to motors with frequency converter, the advantages are the better cost-efficiency and reliability of the soft starters. Compared to motors with a starting transformer or separate starting motor, the lower current load of this drive concept is the positive factor.

Left: Marine drives from Sachsenwerk are to be found aboard many ocean liners. The "Seven Seas Voyager" is equipped with pod drives, generators and thruster drives from Dresden.

Right: Four such diesel generators supply the electrical system of a luxury yacht.

Left: Two of these motors are required to drive the ship's propeller.

Right: The research vessel "Niot" possesses thruster motors manufactured in Dresden

Service workshop initiative in Dresden

VEM customer service technicians discuss experiences

To help guarantee customer proximity and local service demonstrating the highest technical competence, and in this way to strengthen the customer's confidence in the companies of the VEM Group, Sachsenwerk has initiated a "Service Workshop".

Twice a year, the customer service technicians meet with management representatives to discuss experiences and to offer proposals for improvement. Typical topics are means to improve work at the installation site, for example through the use of modern tools and assembly fixtures, or necessary corrections to installation procedures. The objective is to ensure that all VEM customers, irrespective of the country in which they are based, are able to enjoy the same support and the same high level of service from our company.

VEM technicians guarantee good customer service.

Specialist for hardware questions

Ernst Heuer: Network administrator for the VEM Group

When Wernigerode-born Ernst Heuer took up his apprenticeship as an electrical fitter after leaving school, he couldn't possibly have known which exciting career turns lay ahead. His subsequent college studies in electrical installations and engineering dictated the general direction.

Ernst Heuer has worked at VEM motors in Wernigerode for almost 35 years. If he were to write a career autobiography, then this could equally serve as a history of modern data processing. After ten years in project design, he moved to a mainframe data centre in the 1980s. The experience gathered there, where he was in charge of a team of 35 colleagues, is still useful for his work today. 1990 heralded the transition from mainframes to PC systems. New tasks and projects were then to be accomplished with significantly fewer staff. Ernst Heuer was responsible for the installation of a data network at VEM motors. Wernigerode was in this respect one step ahead of the other VEM companies. This background proved invaluable for the next step – the integration of all the VEM locations into a single supraregional network. With his small team, Ernst Heuer contributed decisively to the client-server technology which was soon to become standard. "I only take care of the hardware side," he says modestly. But that means that it is his telephone which rings with a call for help whenever a computer fails to boot, a telephone fails to connect or a signalling system fails to respond. "Because I travel so much between our different locations, the Competence Centres and our subsidiaries, I work together with local partners to ensure that there is always someone available." And he is quick to emphasise that VEM is supported by very reliable and competent partners.

"I have experienced many stages in the development of modern data processing."

The customers will rarely see Ernst Heuer in person. But he is nevertheless omnipresent with his work. For example, the PC and telephone installations which have integrated the VEM Competence Centre into the group network since 2000 were his work. And he then went on to provide comparable infrastructure for the VEM subsidiaries in Great Britain, Austria, Finland, Sweden and Slovakia.

Gradually, his sphere of responsibilities has become wider and wider. Whether the VEM stand is to be set up or dismantled at the Hanover Fair, or a communication system is to be installed for a Technical Conference in Wernigerode – Ernst Heuer is the duty hardware specialist.

And his colleagues know: He'll get it all to work. They rely on Ernst Heuer, who always seems to be jumping back and forth between several different tasks, but nevertheless maintains a clear overview. And he stays equally calm when it comes to ensuring the technical basis for customer marketing services, whether that be the electronic processing of orders, shipping papers and order confirmations, browsing of the product catalogue via the Internet, or implementation of the latest transponder technologies.

Photo: Karin Wagner

Ernst Heuer (61) in the server room at VEM motors in Wernigerode, one of the hearts of the VEM networks. He is married with two children and two grandchildren.

| TRANSPORT SYSTEMS |

Traction motors for Belarus

The first eight traction motors for two prototypes of a new generation of trams are to leave Sachsenwerk headed for Belarus in April. This was agreed in a development and supply contract for wide-gauge tram bogies concluded last December. A group of representatives from leading German suppliers to the rail vehicle industry received an invitation from manufacturer Belcommunmash to visit the Belarus capital Minsk for the signing.

The new product, for which Sachsenwerk is to supply the asynchronous traction motors, is considered the key component for a new generation of trams with modern three-phase drives. The initial vehicles are to be sold to Russia, but Belcommunmash also sees good sales potential in other former GUS states.

According to the contract, a total of 200 traction motors are to be manufactured in Dresden. The ambitious schedule is for a fully assembled tram to be equipped and presented to the public in July 2008.

Belcommunmash is the leading manufacturer of trams, trolley buses and fire brigade vehicles in Belarus. The company employs around 900 people and returned a turnover of approx. 100 million US dollars in 2006.

Photo: Karin Wagner

View of the traction motors shop at Sachsenwerk

Finnish subsidiary of VEM motors meets in Dresden

Photo: Karin Wagner

VEM motors Finland, the Finnish subsidiary of VEM motors, organised its 2008 annual conference for dealers and distributors in Dresden. At the focus of attention, alongside the business figures for 2007, were measures to further expand the sales network in the Scandinavian region. To enable them to better convey the benefits of VEM products to the customers, the participants were given detailed information on the technology and functioning of VEM energy-saving motors, the S4 geared motors from Rexroth Stephan and the new Vacon product line, the micro frequency converter Vacon 10. At the same time, the company honoured some of the outstanding sales successes achieved in Finland.

On a tour of Sachsenwerk (photo left), the guests learned about VEM's medium- and high-voltage electric machines and gained an insight into the world of large machines.

Main catalogue 2008 in six sections

Punctually for the Hanover Fair, the first section of the new main catalogue for 2008 – "VEM Low-Voltage Motors" – has now been published. From standard versions with different cooling types, via energy-saving variants to built-in motors, it presents the full range of universal squirrel-cage three-phase machines from the VEM Group.

With this separation into six individual sections, the product catalogues are for the first time aligned to particular fields of application. All technical information is tailored to the requirements of the branches in question.

This improves the overall clarity of the new catalogues and simplifies handling for the customers. The reduced scope of each section also means that catalogue updates can be realised much faster. The five coming sections will be devoted to branch solutions for steel and rolling mills, for applications subject to explosion hazards, and for mechanical engineering, ventilation and shipbuilding, as well as variable speed drives and slipring machines.

The main catalogue for 2008 has not only been fully revised in respect of its contents. It has also been given a new outward appearance. With their new title design, the catalogues reflect the generally modernised corporate identity of the VEM Group.

Attentive readers of "VEM Impulse" have no doubt noticed that the company magazine has also benefited from a facelift. We hope that you, too, like the fresh, reader-friendly design.

| IMPRINT |

Publisher:
VEM-Firmenverbund/
VEM-Group

Responsible editor:
Sabine Michel
Public Relations
Pirnaer Landstraße 176
D-01257 Dresden, Germany
☎ +49-(0)351-208-1001
michel@vem-group.com

Contributing editors:
Sabine Hartenstein ☎ +49-(0)375-427-320
Petra Klingebiel ☎ +49-(0)35771-54-260
Karin Wagner ☎ +49-(0)351-208-3291
Bernd Waßmus ☎ +49-(0)3943-68-3169
Karin Hanig ☎ +49-(0)351-85367-16
(Kommunikation Schnell)

Art:
Kommunikation Schnell GmbH, Dresden

Editorial deadline:
12th March 2008

Print:
Druckerei Vetters GmbH & Co. KG